How to Measure Fire Column Covers - Design 9

Measurement Instruction

- Give exact measurement from edge to edge.
- The height dimensions will remain same as provided by you.
- We add 0.5" to 1.5" leeway on the given width/depth for easy pull-in and pull-out.

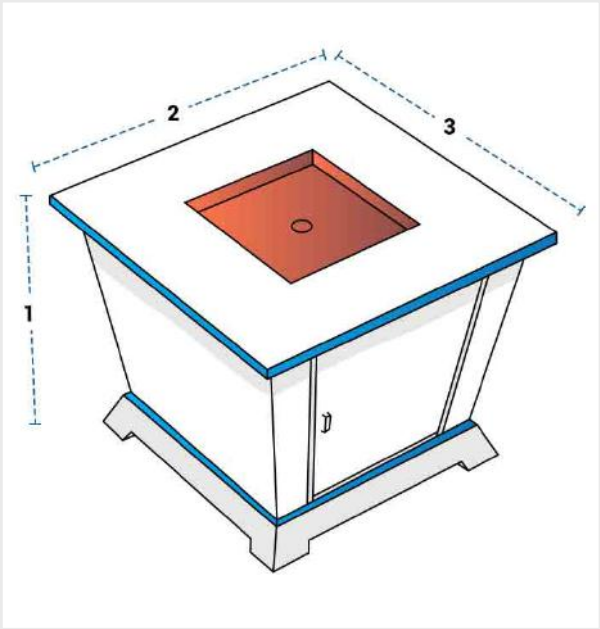

Measurement (Inches)

1. Height		2. Width	
3. Depth			

1. Height:
Height of the Fire Column

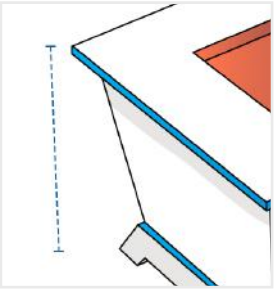

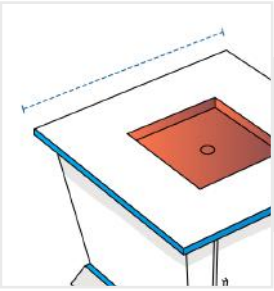

2. Width:
Width of the Fire Column

3. Depth:
Depth of the Fire Column

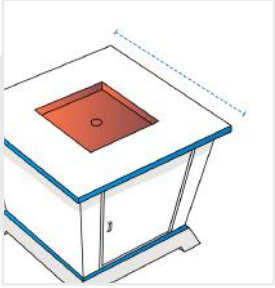

We encourage you to upload the image of the article you need the cover for - this helps our team ensure covers are designed keeping your requirements in mind.